

CONVEYOR MANUFACTURERS ASSOCIATION OF SOUTH AFRICA NPC

TECHNICAL DOCUMENT

STATIC SHAFT PULLEYS WITH INTERNAL BEARINGS

CMA TD03 Rev00 2013

Table of Contents

1 INTRODUCTION ..... Error! Bookmark not defined.
2 NORMATIVE REFERENCES **3**
3 DEFINITIONS **3**
4 REQUIREMENTS **5**
4.1 Dimensions 5
4.1.1 Basic diameter 5
4.1.2 Shell thickness 5
4.1.3 Total indicator run-out (TIR) 5
4.2 Preferred bearing journal diameter 6
4.3 Belt width, face width and dead eye centre dimensions (see figure 1) 7
4.4 Lagging 12
4.5 Crowning (see figures 4a and 4b) 12
4.6 Constructional requirements 13
4.6.1 General 13
4.6.2 Shaft deflection 13
4.6.3 Design of shell and end disc 13
4.6.4 Welding 13
4.6.5 Heat treatment 13
4.6.6 Material certificates 13
4.6.7 Tolerances and surface finish 14
4.6.8 Balancing 14
4.6.9 Corrosion protection 14
4.6.10 Handling of pulleys and shafts 14
4.6.11 Special requirements for underground use and for use in fiery mines 14
5 MARKING **14**
6 ACKNOWLEDGEMENTS **15**
7 REVISIONS AND AMENDMENTS **15**

1 INTRODUCTION

This document addresses additional requirements to SANS 1669 for dead or static shaft pulleys fitted with internal bearings. The application of dead shaft pulleys in the context of this specification is restricted to the line of action of the components of maximum resultant force acting on the dead eyes always being in compression and in direct shear parallel to the base of the dead eyes.

It remains the responsibility of the conveyor / pulley engineer to ensure adequacy of strength and design for the specific application.

2 NORMATIVE REFERENCES

SANS 1669 part 1 - Conveyor belt pulleys – part 1 Pulley types, construction and dimensions

SANS 1669 part 2 - Conveyor belt pulleys – part 2 Lagging.

Various tables from SANS 1669 parts 1 and 2 are repeated in this specification for convenience and reference must be made to the original standards for on-going compliance.

Definitions as SANS 1669-1 and SANS 1669-2 are copied into this document for convenience.

3 DEFINITIONS

3.1 **acceptable**
acceptable to the parties concluding the purchase contract.

3.2 **basic diameter (of pulley)**
(d_1) the diameter of the bare (unlagged) pulley shell or rim, measured at the centre (see figure 1)
NOTE – in the case of crown pulleys, the basic diameter is also the maximum diameter

3.3 **bearing journal**
that part of the pulley shaft or axle that is in contact with, or enclosed by, the bearing(s) (see figure 1)

3.4 **crowning**
the profile of the cylindrical portion of the pulley in which the diameter reduces symmetrically about the face centre line, from a maximum in the centre of the pulley face to a minimum on the edges of the face

3.5 **dead eyes**
the shaft or axle mounting blocks

3.6 **dead eye centre separation/distance (E)**
the dimension between the centre-lines of the dead eyes (see figure 1)

3.7 **end disc**
a circular plate that joins the shell to the shaft

3.8 **face**
the cylindrical portion of the pulley in contact or in potential contact with the belt

3.9 **face width (b)**
the width of the cylindrical portion of the pulley (see figure 1)

3.10 **hub**
that part of the end disc containing the bearings

3.11 **keep plates**
the steel plate bolted to the dead eye that fits into a slot in the shaft or axle to prevent rotation of the shaft or axle

3.12 **lagging**
the covering or coating on the pulley face
NOTE the lagging is usually made of rubber, but other materials may be specified by the purchaser

3.13 **pulley**
a cylindrical drum with a flat or profiled (crowned) rim, mounted on a shaft or axle and driven by a belt that passes around it

3.14 **shell; rim**
the cylindrical portion of the pulley, of thickness as specified by the purchaser

3.15 **total indicator run-out (TIR)**
the maximum amount by which the concentricity of the pulley shell varies

4 REQUIREMENTS

4.1 Dimensions

4.1.1 Basic diameter

The basic diameter of the pulley shall be based on the operating conditions and shall be one of the values given in table 1 or as specified (see SANS 1669-1 Annex A(a)).

Table 1 – Basic diameter of pulley (from SANS 1669)

Dimensions in millimetres

1	2	3	4
Basic pulley diameter[a, b] d_1			
ISO R10 Series Preferred	**ISO R20 Series Additional**	**ISO R40 Series Additional**	**Standard pipe**[c] **Non-preferred**
200	-	-	219
250	-	-	273
315	-	-	324
400	-	-	355
500	-	-	406
630	710	750	457
800	900	-	508
1 000	1 120	1 100	559
1 250	1 400	-	610
1 600	1 800	-	-
2 000	-	-	-
[a] See figure 1.			
[b] Exclude the pulley lagging when determining basic diameters.			
[c] Steel pipe that complies with the requirements of SANS 719, grade B, with a minimum wall thickness of 10 mm and a minimum yield stress of 241 MPa.			

4.1.2 **Shell thickness**

The shell thickness shall be as required by the purchaser (see SANS 1669 – 1 Annex A(b)), subject to a tolerance of +10 % after machining of the shell but, if applicable, before crowning.

4.1.3 **Total indicator run-out (TIR)**

The total indicator run-out over the bare shell (after machining) shall not exceed 0,5 mm.

4.2 Preferred bearing journal diameter

The diameters of the bearing journal diameter shall be as per table 2.

The tolerances and fits of the shaft and hub diameters required for a stationary shaft and rotating hub application shall be in accordance with the recommendations from the bearing manufacturer.

Table 2 – Preferred bearing journal diameter (from SANS 1669)

Dimensions in millimetres

1
Bearing journal diameter
40
50
65
75
90
100
110
115
125
135
140
150
160
170
180
200
220
240
260
280
300
Diameters other than those given in this table may be specified by the purchaser (see Annex A(c)).

The pulley shaft may be stepped down from the bearing journal diameter to the dead eye diameter for reasons of economical design and ease of assembly.

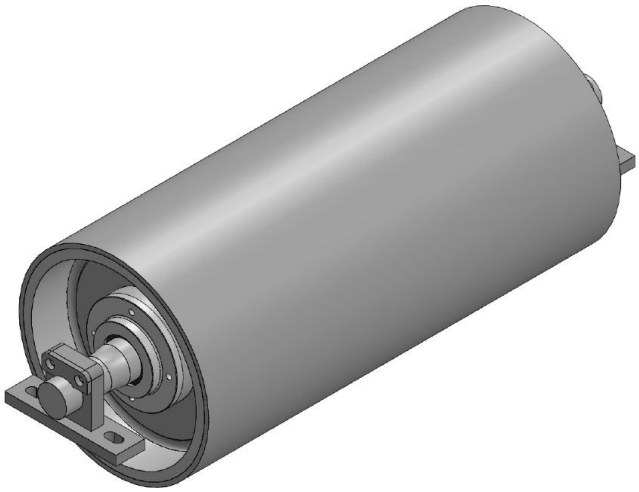

Figure 1: image of stepped down pulley shaft

4.3 Belt width, face width and dead eye centre dimensions (see figure 2)

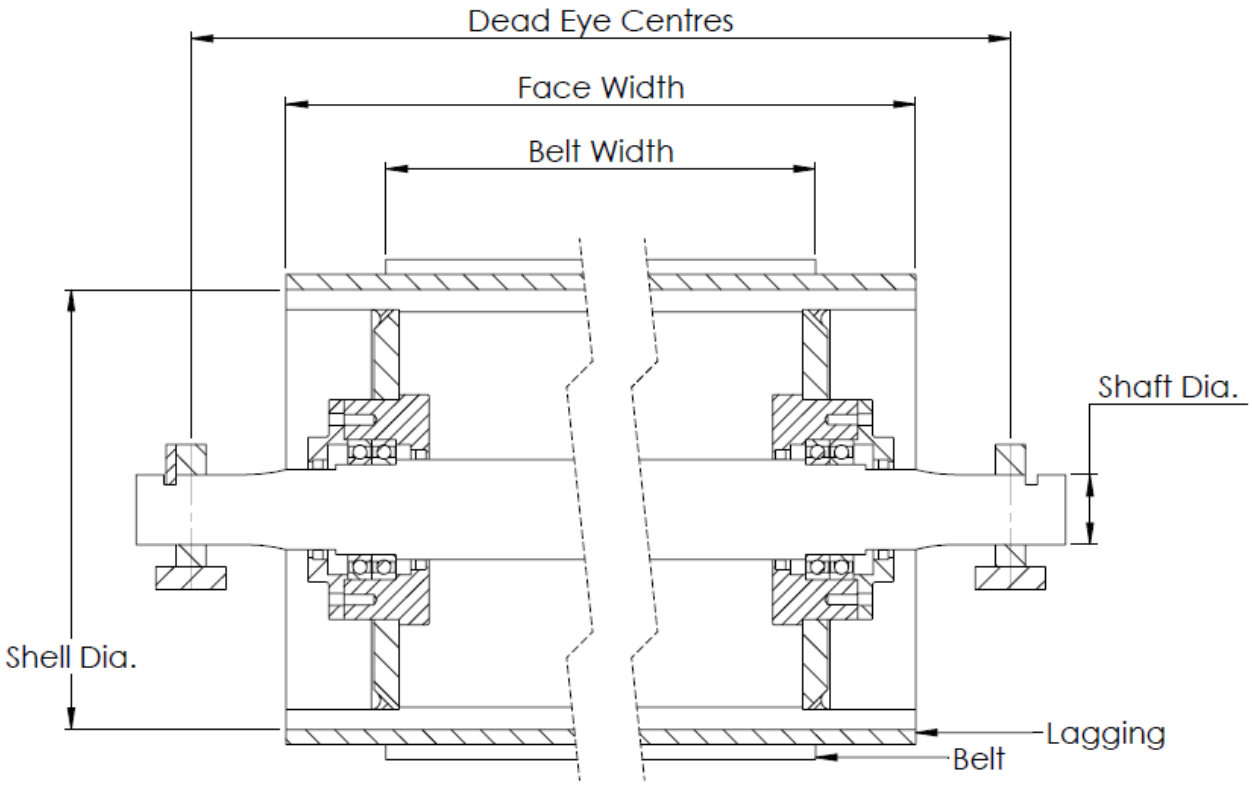

Figure 2: Belt width, face width and dead eye centre dimensions

Face width and dead eye centre dimensions in relation to belt width shall be as given in table 3.

Table 3 – Dead eye centres (columns 1 & 2 from SANS 1669-1

1	2	3
Dead eye centres		
Belt Width	**SANS 1669 - 1**	**Dead eyes 200 wider than pulley face width per side**
	Face width	**Dead eye centres**
500	600	1 000
600	700	1 100
750	900	1 300
900	1 050	1 450
1 050	1 200	1 600
1 200	1 350	1 750
1 350	1 500	1 900
1 500	1 700	2 100
1650	1850	2250
1 800	2 000	2 400
2 100	2 300	2 700
2 400	2 600	3 000

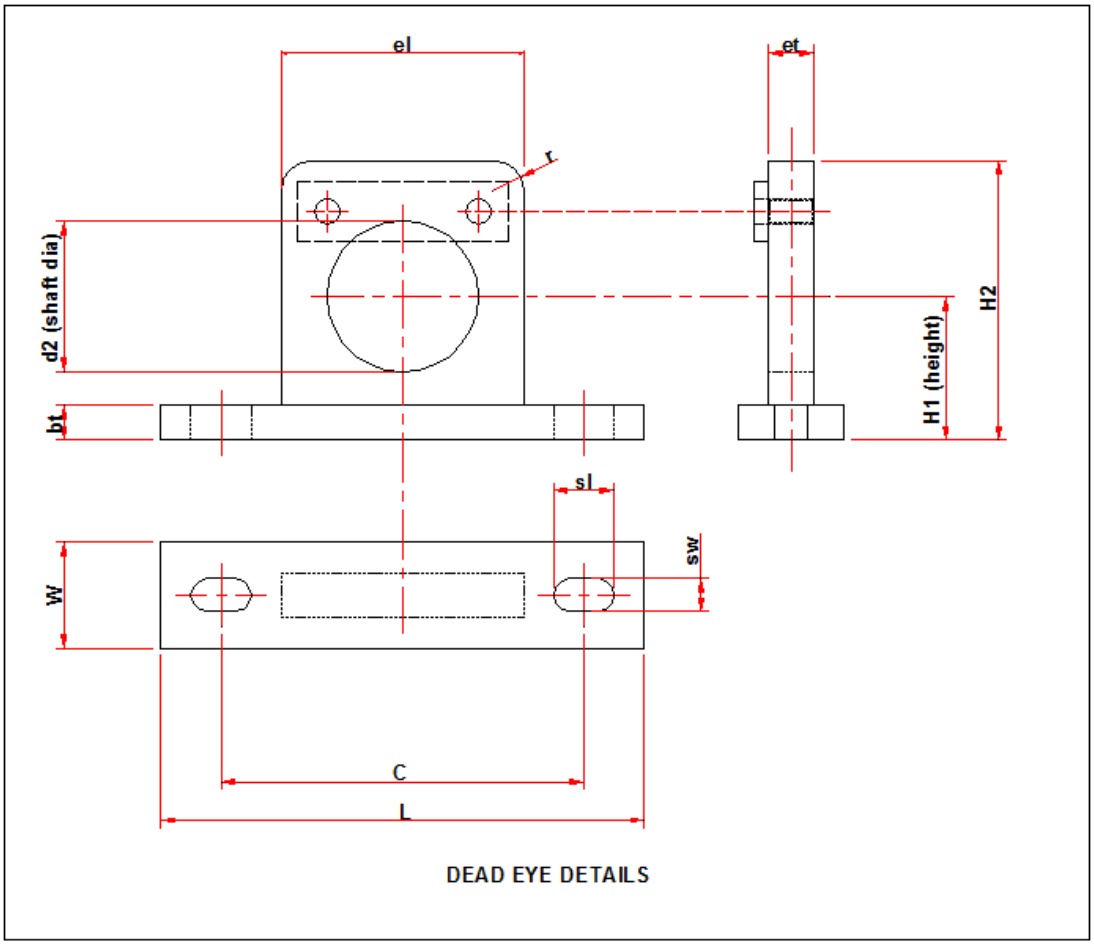

Figure 4: Dead eye details

Table 4 – Dead eye dimension details

1	2	3	4	5	6	7	8	9	10	11	12	13
Dead eye dimensions												
d2	**H1**	**C**	**L**	**W**	**et**	**el**	**H2**	**bt**	**r**	**sw**	**sl**	**Bolts**
50	70	190	270	70	30	110	120	23	15	22	40	M20
55	72	195	275	70	30	115	124	23	15	22	40	M20
60	75	200	280	70	30	120	130	23	15	22	40	M20
65	77	205	285	70	30	125	139	23	15	22	40	M20
70	80	210	290	70	30	130	145	23	15	22	40	M20
75	82	215	295	70	30	135	149	23	15	22	40	M20
80	85	220	300	70	30	140	155	23	15	22	40	M20
85	87	225	305	70	30	145	159	23	15	22	40	M20
90	90	230	310	70	30	150	165	23	15	22	40	M20
100	95	240	320	70	30	160	185	23	15	22	40	M20
110	109	278	374	80	40	182	204	28	15	26	48	M24
115	111	283	379	80	40	187	208	28	15	26	48	M24
125	116	293	389	80	40	197	218	28	15	26	48	M24
135	121	303	399	80	40	207	228	28	15	26	48	M24
140	124	308	404	80	40	212	234	28	15	26	48	M24
150	129	318	414	80	40	222	244	28	15	26	48	M24
160	150	370	490	100	50	250	280	38	15	32	60	M30
170	155	380	500	100	50	260	290	38	15	32	60	M30
180	160	390	510	100	50	270	300	38	15	32	60	M30
200	170	410	530	100	50	290	320	38	15	32	60	M30
220	180	430	550	100	50	310	340	38	15	32	60	M30
240	196	492	636	110	60	348	366	38	15	38	72	M36
260	206	512	656	110	60	368	396	38	15	38	72	M36
280	216	532	676	110	60	388	416	38	15	38	72	M36
300	226	552	696	110	60	408	446	38	15	38	72	M36

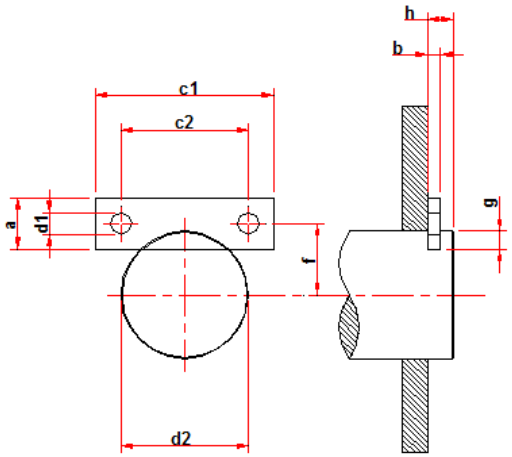

KEEP PLATE DETAILS TO DIN 15 058

Shaft diameter (d2)			Keep plate					Position	Shaft end			Bolt size
Over	Up to	Actual	a	b	c1	c2	d	f	g	h	Slot width	
40	63	45	30	8	100	70	13	31	6.5	16	8.3	M12
		50						33	7			
		55						35	7.5			
		56							8			
		60						36	9			
		63						37	9.5			
63	100	70	40	10	140	100	17	45	10	20	10.3	M16
		75						47	10.5			
		80						48	12			
		90						52	13			
		100						56	14			
100	160	110	50	12	190	140	21	65	15	25	12.3	M20
		125						71	16.5			
		140						77	18			
		160						85	20			
160	250	180	60	16	250	200	25	98	22	32	16.3	M24
		200						105	25			
		220						112	28			
		250						125	30			
250	300	260	70	20	300	240	31	134	31	40	20.3	M30
		280						142	33			
		300						150	35			

Clearance allowed between the keep plate and the slot milled in the shaft is 0,3 mm (thus ***Slot width = b + 0,3*** *)*

Table content is based on DIN 15058

Figure 4: Keep Plate Details

4.4 Lagging

Lagging shall comply with the requirements of SANS 1669-2.

4.5 Crowning (see figures 4a and 4b)

The pulley surface in contact with the belt shall be flat or crowned, as required by the purchaser. (See SANS 1669-1 Annex A(e)).

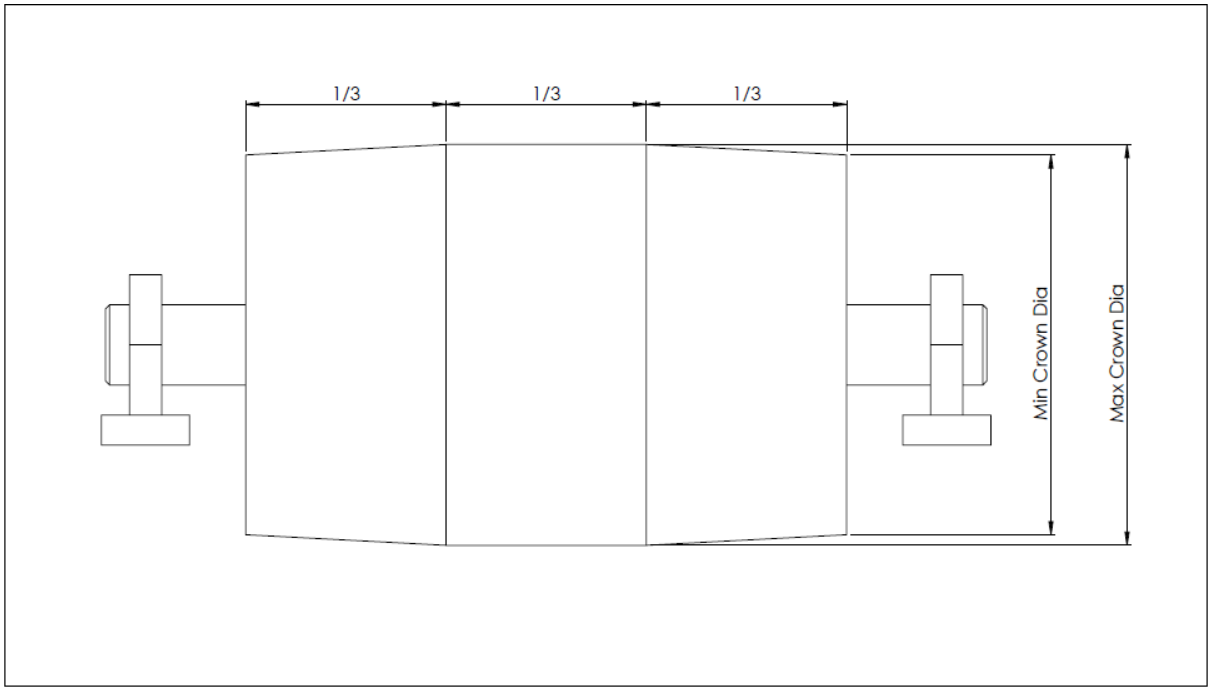

Figure 5a: Edge crowning

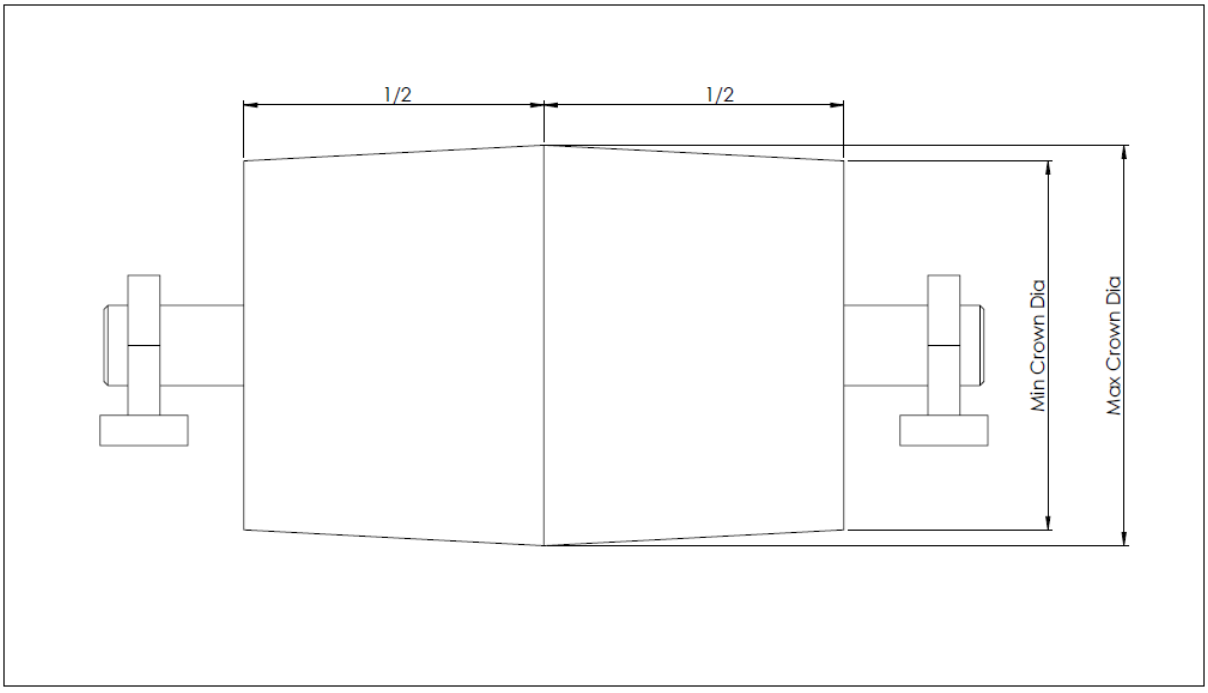

Figure 5b: Centre crowning

The amount of crowning shall be as agreed with the belt manufacturer. (See SANS 1669-1 Annex A.2(a)).

NOTE 1 In the case of crowned pulleys, the basic diameter is also the maximum diameter over steel.

NOTE 2 The minimum diameter of the crown is measured at the edges of the pulley face over steel.

4.6 Constructional requirements

The minimum constructional requirements shall be as given in Clause 4.6.1 to Clause 4.6.11 (inclusive).

4.6.1 General

4.6.1.1 Quality assurance programmes shall be as agreed upon between the manufacturer and the purchaser (see SANS 1669-1 Annex A2(b)).

4.6.1.2 The constructional requirements of the pulley shall be as required by the purchaser (see SANS 1669-1 Annex A1(g)).

4.6.2 Shaft deflection

The maximum deflection of the shaft shall be determined by the lower requirement of the following:

- The slope of deflection of the shaft at the bearing, under maximum design load, shall not exceed the bearing manufacturer's recommendations.
- The slope of deflection of the shaft local to the seal, under maximum design load, shall not exceed the seal manufacturer's recommendations.

4.6.3 Design of shell and end disc

The mechanical design of shells and end discs shall be in accordance with acceptable engineering practice and shall provide for a fatigue life as agreed between the manufacturer and the purchaser (see SANS 1669-1 Annex A2(c)).

4.6.4 Welding

Welding of components shall be done in accordance with a national or an international welding standard approved by the purchaser. The welding procedures and the qualifications of welding operators shall be in accordance with agreed standards (see SANS 1669-1 Annex A2(d)). Non-destructive examination shall be carried out on the welded joints (see SANS 1669-1 Annex A1(h)).

4.6.5 Heat treatment

The heat treatment of pulleys or shafts, or both, shall be as required (see SANS 1669-1 Annex A1(i)). Shafting of diameter exceeding 120 mm shall be normalised. (See SANS 1669-1 Annex A1(i)).

4.6.6 Material certificates

All materials used in the manufacture of the pulleys shall be traceable. Material certificates shall be provided by the manufacturer.

4.6.7 Tolerances and surface finish

The tolerances and surface finish of all shafts and bearing journals shall comply with the requirements of the bearing manufacturer.

4.6.8 Balancing

Pulleys shall be statically balanced. The out-of-balance of any pulley shall not exceed 0,5 gram per millimetre of the diameter of the finished shell. Balancing masses shall not be attached to the end disc.

4.6.9 Corrosion protection

Immediately after acceptance of the pulleys, exposed shaft ends shall be protected against corrosion and accidental damage, by means of an anti-corrosive coating (that can easily be removed by washing with solvent), by wooden slats or by strapping (or all of these), or as required by the purchaser (see SANS 1669-1 Annex A1(j)). Other corrosion protection to the internal or external surfaces of the shell shall be as required by the purchaser.

4.6.10 Handling of pulleys and shafts

4.6.10.1 Assembled pulleys shall be handled with devices that will prevent damage to the coatings or fitments.

4.6.10.2 Pulleys shall be so loaded and supported that no damage can occur to the lagging, bearings or fitments.

4.6.10.3 Chains or slings shall not be slung around shafts.

4.6.11 Special requirements for underground use and for use in fiery mines

The construction and installation of the belt pulleys shall be in accordance with the requirements of SANS 10123 regarding the minimisation of the generation of static electricity. All pulleys shall be earthed.

5 MARKING

The following details shall be permanently and legibly marked on each conveyor belt pulley:

5.1 the name, trade name or trade mark of the manufacturer;

5.2 the date of manufacture;

5.3 a traceable part number; and

5.4 any other details, as required by the purchaser (see SANS 1669-1 Annex A1(k)).

6 ACKNOWLEDGEMENTS

This specification was reviewed by a working group of representatives of Anglo American and Sasol (representing User groups) together with CMA member companies Afripp, Bosworth, CPM, DRA, Flexco, MHC, MSCP, Sandvik and SKF

Further revisions were conducted by CMA member companies

7 REVISIONS AND AMENDMENTS

Revision 00	September 2013	Original document
Amendment 1	December 2025	CMA TD03 Rev00 assigned [previously CMA MP01 Rev00} CMA formatting applied