

CONVEYOR MANUFACTURERS ASSOCIATION OF SOUTH AFRICA NPC

TECHNICAL DOCUMENT

CONVEYOR PULLEY BEARING SUPPORT PEDESTALS

CMA TD01 Rev00 2018

CONVEYOR PULLEY BEARING SUPPORT PEDESTALS

While the majority of conveyor designs are probably based on the conveyor pulley bearings being mounted directly onto the structural steelwork with a standard sole plate under the plummer block, there are many instances where it would be more convenient to design the pulley supports as pedestals. The pedestals are useful especially when pulleys are relatively close together (as in dual drive snub and drive pulleys), or to provide a reasonable access clearance to belt scrapers or inspection panels.

The pedestals are often designed with the plummer block mounting plane parallel to the structural mounting plane. In this case, the vertical dimensions of the pedestal are normally designed to suit the clearance requirements, between the structure and belt cleaners, chutes and so on. In the dimensions given below, the minimum pedestal height is based on a reasonable working clearance between the structural hold-down bolts and the plummer block mounting bolts.

While parallel pedestals are common, the requirement that the direction of the resultant load should pass through the bearing base and not parallel to the bearing horizontal split plane is often specified. Designs which incorporate a sloped mounting member (with reference to the structural plane) include fixed pedestals or even sloped structural members. The difficulty with these arrangements is that proper alignment of the pulley bearings is almost impossible. On a sloped surface, adjustment along the slope will result in the pulley shaft centres being altered in both horizontal and vertical planes simultaneously. Given that the normal alignment tolerances of pulley bearings are set at 1:1000, it can be seen that variations in location as a result of sloped planes will make this tolerance very difficult to achieve.

Where support pedestals are required under conveyor pulley bearings, the pedestals should comply with the following:

1. The pedestal mounting surfaces should comply with the bolting requirements for the bearing plummer blocks.
2. The pedestal top plate should be designed to firmly fix the plummer block. For this reason, the mounting holes should not be slotted.
3. Should the bearing be shop-aligned on the top plate, any locating dowels should be inserted on the top plate.
4. The lower mounting surface, which is the interface between the pedestal and the supporting structure, should be equipped with slots, in accordance with the sole plate data.
5. The use of pedestals still requires the insertion of an appropriate sole plate, to provide the surface tolerances required for direct mounting of plummer blocks.
6. The adjusting screws and blocks will be designed in accordance with the standard sole plate data. The adjustments (both horizontal and vertical) will therefore take place on the interface surface and not between the pedestal and the plummer block. This will allow the pedestal to be inclined, in order to ensure the resultant load passing through the plummer block base.
7. It is recommended by most manufacturers that the surface for the bearing housing mounting should be finished to a roughness $R_a \leq 12{,}5$ µm. The flatness of the surface

should be to IT7 in accordance with ISO 1101:2012. For moderate loading, the flatness could be reduced to IT8, but the more stringent tolerance should be applied in the general case.

8. In the case of pedestals, the tolerances and finishes will apply to both the base and bearing mounting surfaces.
9. The centre of the pedestal is considered as the bearing centres quoted for the pulley and is deemed as the centre of the bearing housing.
10. The pedestals are normally fabricated from steel that complies with the requirements of SANS 50025 / EN 10025:2004 grade S 355 JR.
11. Welding should comply with the requirements of BS EN 1011-1:2009.

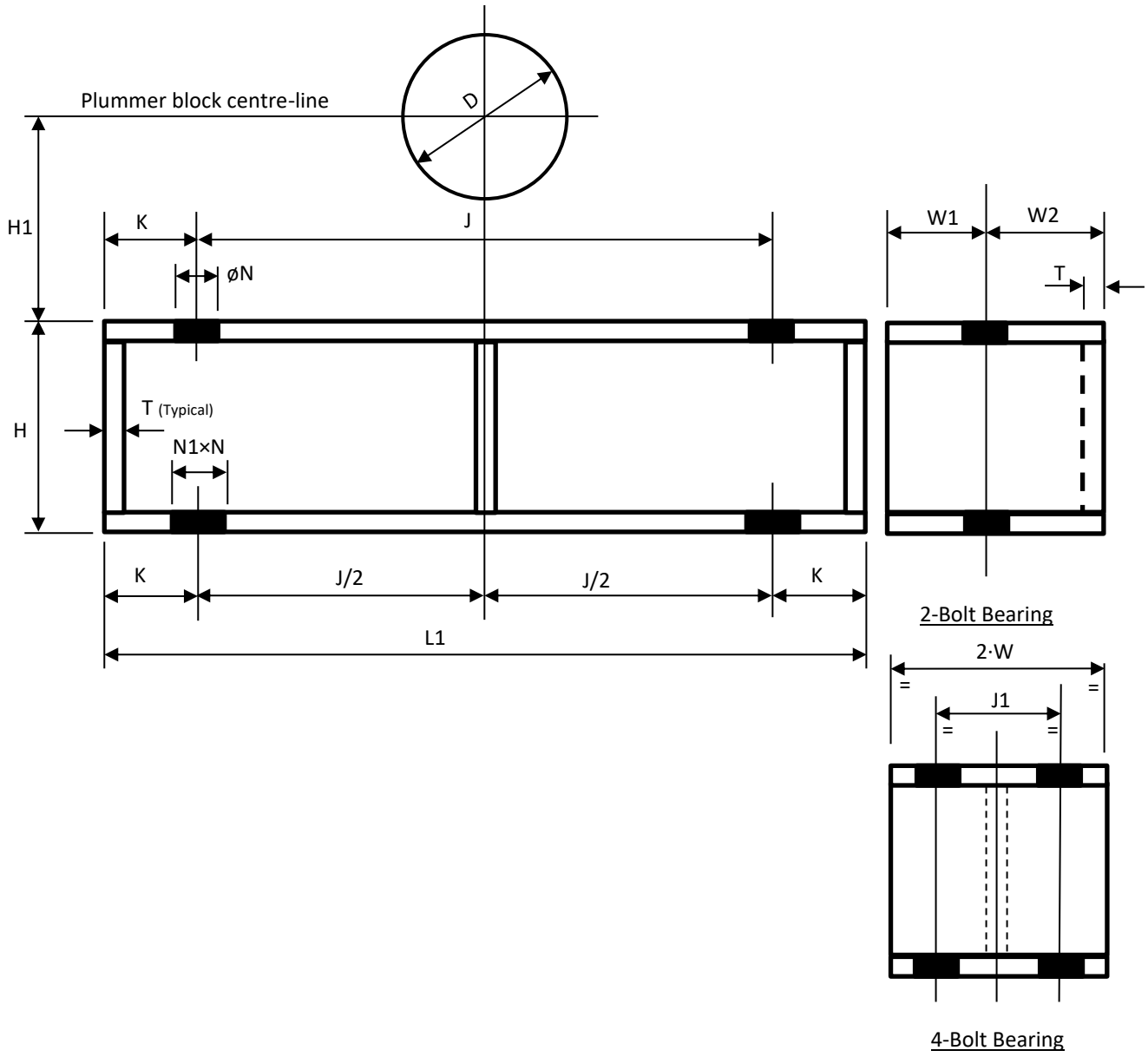

Figure 1: Typical Parallel Pedestal

For the top plate sloped at any angle **α**, the rotation point is accepted as the left corner of the underside of the top plate.

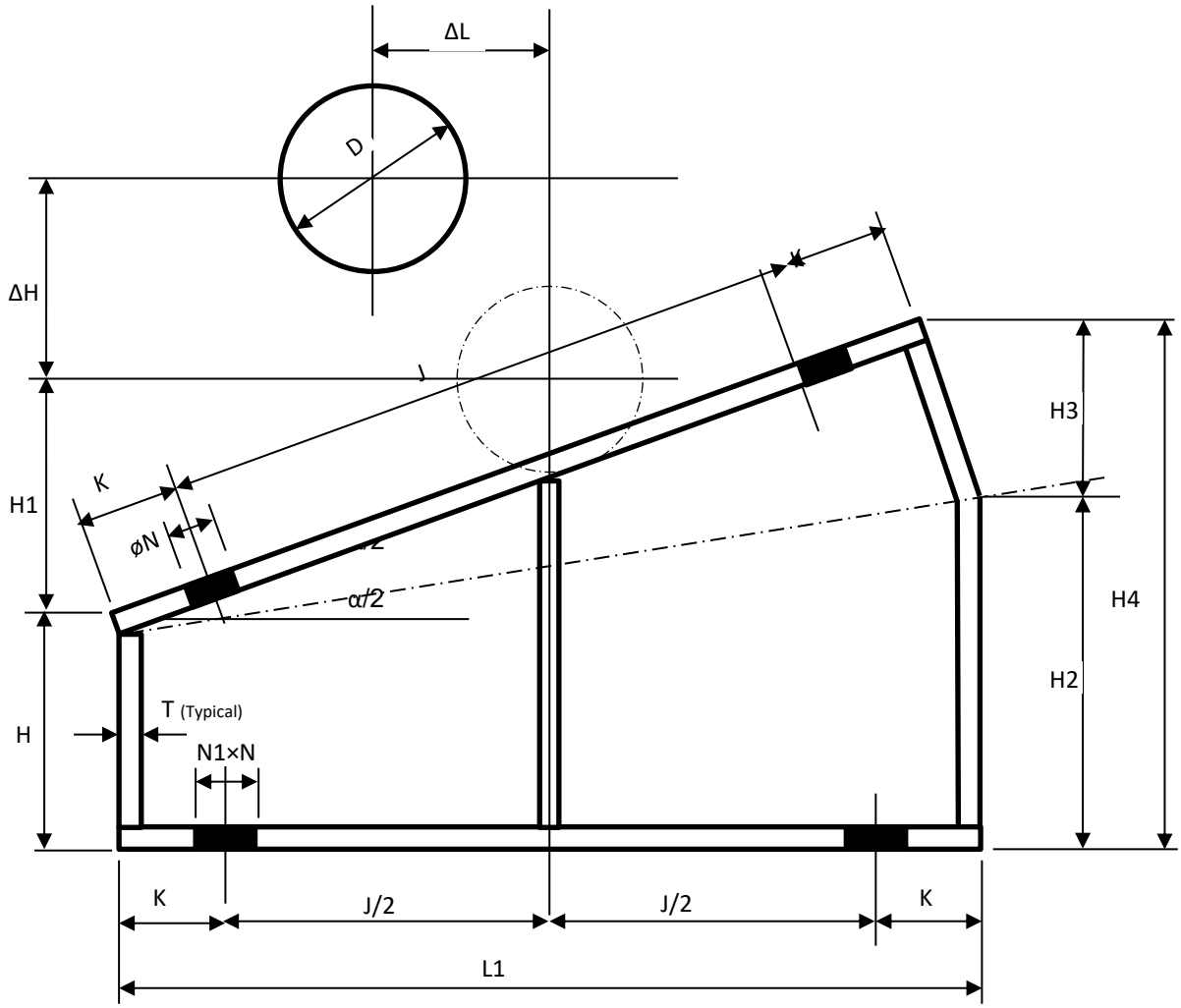

Figure 2: Typical Sloped Pedestal

The cross dimensions will be the same as for the parallel pedestal. The “high” end is based on a 90° flange plate, in order to minimise impingement of the bearing bolts. The “low” end is based on the minimum dimension of H as determined for the parallel pedestals.

Tables of typical dimensions are indicated below, for increments of 5°, up to a slope of 45°. The basic dimensions are determined on the basis of the standard bearing plummer block dimensions. For slopes other than those tabled, a set of equations are shown in Appendix A.

In the tables below, the following data is extracted from standard plummer block details.

Table 1: Key to column headers in following tables

All dimensions are in millimeters.

D	Shaft (bearing) diameter
H1	Height to plummer block horizontal split line
J	Bolt hole centres
N	Bolt diameter
N1	Slot length
Lb	Bearing housing overall length

The tables are based on 5° increments, up to 45°. It is unlikely that a pedestal sloped at an angle greater than 45° with respect to the horizontal will be required.

Slope α = 5°

2-bolt Housings

D	H1	J	T	N	N1	G	Lb	L1	H	H2	H3	H4	K	ΔH	ΔL	W1	W2
40	60	170	8	15	20	12	205	261	78	81	19	100	45.5	16	5	30	38
50	70	210	10	18	24	16	255	309	87	90	23	113	49.5	19	5	35	45
65	80	230	10	18	24	16	280	334	87	92	25	117	52	20	6	40	50
75	95	260	10	22	28	20	320	374	93	99	26	125	57	22	7	45	55
90	112	320	10	26	32	24	380	434	100	109	29	138	57	25	9	55	65
100	125	350	12	26	32	24	410	464	102	110	32	142	57	27	10	60	72
115	150	380	12	28	35	24	445	503	102	112	34	146	61.5	29	12	65	77
125	150	420	12	35	42	30	500	560	112	124	36	160	70	31	12	75	87
135	160	450	12	35	42	30	530	590	112	126	38	164	70	33	13	80	92
140	170	470	12	35	42	30	550	610	112	127	39	166	70	34	14	80	92

4-bolt Housings

D	H1	J	T	N	N1	G	Lb	L1	H	H2	H3	H4	K	ΔH	ΔL	J1	W
150	170	430	16	28	34	24	510	580	106	115	41	156	75	35	13	100	90
160	180	450	16	28	34	24	530	600	106	116	42	158	75	36	14	110	95
170	190	480	16	28	34	24	560	630	106	118	43	161	75	37	15	120	105
180	210	510	16	35	42	30	610	684	116	130	46	176	87	40	17	130	115
200	220	540	16	35	42	30	640	714	116	131	47	178	87	41	18	140	220
220	240	600	20	35	42	30	700	774	120	134	54	188	87	46	19	150	230
240	260	650	20	42	50	36	770	848	130	147	57	204	99	49	21	160	240
260	280	670	20	42	50	36	790	868	130	148	58	206	99	50	23	160	240
280	300	710	20	42	50	36	830	908	130	150	60	210	99	52	24	190	155
300	320	750	20	42	50	36	880	958	130	152	62	214	104	54	26	200	165

Slope α = 10°

2-bolt Housings

D	H1	J	T	N	N1	G	Lb	L1	H	H2	H3	H4	K	ΔH	ΔL	W1	W2
40	60	170	8	15	20	12	205	261	78	93	31	124	45.5	27	12	30	38
50	70	210	10	18	24	16	255	309	87	104	37	141	49.5	32	14	35	45
65	80	230	10	18	24	16	280	334	87	106	39	145	52	34	15	40	50
75	95	260	10	22	28	20	320	374	93	116	43	159	57	37	18	45	55
90	112	320	10	26	32	24	380	434	100	128	48	176	57	42	22	55	65
100	125	350	12	26	32	24	410	464	102	131	52	183	57	46	24	60	72
115	150	380	12	28	35	24	445	503	102	134	56	190	61.5	49	29	65	77
125	150	420	12	35	42	30	500	560	112	149	61	210	70	54	29	75	87
135	160	450	12	35	42	30	530	590	112	152	63	215	70	57	31	80	92
140	170	470	12	35	42	30	550	610	112	153	65	218	70	58	33	80	92

4-bolt Housings

D	H1	J	T	N	N1	G	Lb	L1	H	H2	H3	H4	K	ΔH	ΔL	J1	W
150	170	430	16	28	34	24	510	580	106	141	66	207	75	58	32	100	90
160	180	450	16	28	34	24	530	600	106	142	68	210	75	60	34	110	95
170	190	480	16	28	34	24	560	630	106	145	71	216	75	63	36	120	105
180	210	510	16	35	42	30	610	684	116	160	76	236	87	67	40	130	115
200	220	540	16	35	42	30	640	714	116	162	78	240	87	69	42	140	220
220	240	600	20	35	42	30	700	774	120	168	87	255	87	77	45	150	230
240	260	650	20	42	50	36	770	848	130	184	94	278	99	83	49	160	240
260	280	670	20	42	50	36	790	868	130	186	96	282	99	85	53	160	240
280	300	710	20	42	50	36	830	908	130	189	99	288	99	88	57	190	155
300	320	750	20	42	50	36	880	958	130	194	103	297	104	92	60	200	165

Slope α = 15°

2-bolt Housings

D	H1	J	T	N	N1	G	Lb	L1	H	H2	H3	H4	K	ΔH	ΔL	W1	W2
40	60	170	8	15	20	12	205	261	78	104	42	146	45.5	37	20	30	38
50	70	210	10	18	24	16	255	309	87	118	50	168	49.5	44	23	35	45
65	80	230	10	18	24	16	280	334	87	121	54	175	52	47	26	40	50
75	95	260	10	22	28	20	320	374	93	132	59	191	57	52	31	45	55
90	112	320	10	26	32	24	380	434	100	147	67	214	57	59	36	55	65
100	125	350	12	26	32	24	410	464	102	151	72	223	57	64	40	60	72
115	150	380	12	28	35	24	445	503	102	156	78	234	61.5	68	47	65	77
125	150	420	12	35	42	30	500	560	112	174	85	259	70	75	48	75	87
135	160	450	12	35	42	30	530	590	112	178	89	267	70	79	51	80	92
140	170	470	12	35	42	30	550	610	112	180	92	272	70	81	54	80	92

4-bolt Housings

D	H1	J	T	N	N1	G	Lb	L1	H	H2	H3	H4	K	ΔH	ΔL	J1	W
150	170	430	16	28	34	24	510	580	106	166	92	258	75	80	53	100	90
160	180	450	16	28	34	24	530	600	106	169	94	263	75	82	56	110	95
170	190	480	16	28	34	24	560	630	106	173	98	271	75	86	59	120	105
180	210	510	16	35	42	30	610	684	116	190	105	295	87	92	65	130	115
200	220	540	16	35	42	30	640	714	116	194	109	303	87	96	68	140	220
220	240	600	20	35	42	30	700	774	120	202	121	323	87	106	74	150	230
240	260	650	20	42	50	36	770	848	130	222	131	353	99	115	81	160	240
260	280	670	20	42	50	36	790	868	130	224	133	357	99	117	86	160	240
280	300	710	20	42	50	36	830	908	130	230	138	368	99	121	92	190	155
300	320	750	20	42	50	36	880	958	130	236	145	381	104	127	98	200	165

Slope α = 20°

2-bolt Housings

D	H1	J	T	N	N1	G	Lb	L1	H	H2	H3	H4	K	ΔH	ΔL	W1	W2
40	60	170	8	15	20	12	205	261	78	116	53	169	45.5	46	29	30	38
50	70	210	10	18	24	16	255	309	87	131	64	195	49.5	55	33	35	45
65	80	230	10	18	24	16	280	334	87	136	68	204	52	59	38	40	50
75	95	260	10	22	28	20	320	374	93	149	75	224	57	65	44	45	55
90	112	320	10	26	32	24	380	434	100	167	85	252	57	74	51	55	65
100	125	350	12	26	32	24	410	464	102	172	92	264	57	80	57	60	72
115	150	380	12	28	35	24	445	503	102	179	99	278	61.5	85	67	65	77
125	150	420	12	35	42	30	500	560	112	199	109	308	70	95	68	75	87
135	160	450	12	35	42	30	530	590	112	204	114	318	70	99	73	80	92
140	170	470	12	35	42	30	550	610	112	208	118	326	70	102	77	80	92

4-bolt Housings

D	H1	J	T	N	N1	G	Lb	L1	H	H2	H3	H4	K	ΔH	ΔL	J1	W
150	170	430	16	28	34	24	510	580	106	192	116	308	75	100	76	100	90
160	180	450	16	28	34	24	530	600	106	196	120	316	75	103	80	110	95
170	190	480	16	28	34	24	560	630	106	201	125	326	75	107	84	120	105
180	210	510	16	35	42	30	610	684	116	221	135	356	87	115	93	130	115
200	220	540	16	35	42	30	640	714	116	226	140	366	87	120	97	140	220
220	240	600	20	35	42	30	700	774	120	236	154	390	87	132	106	150	230
240	260	650	20	42	50	36	770	848	130	260	167	427	99	143	115	160	240
260	280	670	20	42	50	36	790	868	130	263	170	433	99	145	122	160	240
280	300	710	20	42	50	36	830	908	130	270	177	447	99	151	130	190	155
300	320	750	20	42	50	36	880	958	130	279	186	465	104	159	138	200	165

Slope α = 25°

2-bolt Housings

D	H1	J	T	N	N1	G	Lb	L1	H	H2	H3	H4	K	ΔH	ΔL	W1	W2
40	60	170	8	15	20	12	205	261	78	128	64	192	45.5	55	38	30	38
50	70	210	10	18	24	16	255	309	87	146	77	223	49.5	65	45	35	45
65	80	230	10	18	24	16	280	334	87	151	82	233	52	69	50	40	50
75	95	260	10	22	28	20	320	374	93	166	91	257	57	77	58	45	55
90	112	320	10	26	32	24	380	434	100	186	104	290	57	88	68	55	65
100	125	350	12	26	32	24	410	464	102	193	112	305	57	94	75	60	72
115	150	380	12	28	35	24	445	503	102	202	121	323	61.5	100	88	65	77
125	150	420	12	35	42	30	500	560	112	224	133	357	70	112	90	75	87
135	160	450	12	35	42	30	530	590	112	231	139	370	70	118	96	80	92
140	170	470	12	35	42	30	550	610	112	235	144	379	70	121	101	80	92

4-bolt Housings

D	H1	J	T	N	N1	G	Lb	L1	H	H2	H3	H4	K	ΔH	ΔL	J1	W
150	170	430	16	28	34	24	510	580	106	219	141	360	75	117	100	100	90
160	180	450	16	28	34	24	530	600	106	223	145	368	75	121	105	110	95
170	190	480	16	28	34	24	560	630	106	230	152	382	75	126	111	120	105
180	210	510	16	35	42	30	610	684	116	252	164	416	87	136	122	130	115
200	220	540	16	35	42	30	640	714	116	258	170	428	87	141	127	140	220
220	240	600	20	35	42	30	700	774	120	272	187	459	87	155	139	150	230
240	260	650	20	42	50	36	770	848	130	298	203	501	99	168	151	160	240
260	280	670	20	42	50	36	790	868	130	302	207	509	99	171	160	160	240
280	300	710	20	42	50	36	830	908	130	311	216	527	99	178	171	190	155
300	320	750	20	42	50	36	880	958	130	322	227	549	104	186	181	200	165

Slope α = 30°

2-bolt Housings

D	H1	J	T	N	N1	G	Lb	L1	H	H2	H3	H4	K	ΔH	ΔL	W1	W2
40	60	170	8	15	20	12	205	261	78	140	75	215	45.5	62	48	30	38
50	70	210	10	18	24	16	255	309	87	160	90	250	49.5	74	57	35	45
65	80	230	10	18	24	16	280	334	87	166	96	262	52	79	64	40	50
75	95	260	10	22	28	20	320	374	93	183	106	289	57	87	74	45	55
90	112	320	10	26	32	24	380	434	100	206	122	328	57	100	86	55	65
100	125	350	12	26	32	24	410	464	102	214	132	346	57	107	95	60	72
115	150	380	12	28	35	24	445	503	102	225	142	367	61.5	114	110	65	77
125	150	420	12	35	42	30	500	560	112	250	157	407	70	128	114	75	87
135	160	450	12	35	42	30	530	590	112	258	164	422	70	134	121	80	92
140	170	470	12	35	42	30	550	610	112	263	169	432	70	138	127	80	92

4-bolt Housings

D	H1	J	T	N	N1	G	Lb	L1	H	H2	H3	H4	K	ΔH	ΔL	J1	W
150	170	430	16	28	34	24	510	580	106	245	166	411	75	133	126	100	90
160	180	450	16	28	34	24	530	600	106	251	171	422	75	137	132	110	95
170	190	480	16	28	34	24	560	630	106	259	179	438	75	143	139	120	105
180	210	510	16	35	42	30	610	684	116	283	192	475	87	154	153	130	115
200	220	540	16	35	42	30	640	714	116	291	200	491	87	160	160	140	220
220	240	600	20	35	42	30	700	774	120	307	220	527	87	175	174	150	230
240	260	650	20	42	50	36	770	848	130	337	239	576	99	191	189	160	240
260	280	670	20	42	50	36	790	868	130	343	244	587	99	193	201	160	240
280	300	710	20	42	50	36	830	908	130	353	254	607	99	201	213	190	155
300	320	750	20	42	50	36	880	958	130	367	267	634	104	210	227	200	165

Slope α = 35°

2-bolt Housings

D	H1	J	T	N	N1	G	Lb	L1	H	H2	H3	H4	K	ΔH	ΔL	W1	W2
40	60	170	8	15	20	12	205	261	78	152	86	238	45.5	69	59	30	38
50	70	210	10	18	24	16	255	309	87	174	102	276	49.5	82	70	35	45
65	80	230	10	18	24	16	280	334	87	182	110	292	52	87	78	40	50
75	95	260	10	22	28	20	320	374	93	201	122	323	57	96	90	45	55
90	112	320	10	26	32	24	380	434	100	227	140	367	57	110	105	55	65
100	125	350	12	26	32	24	410	464	102	236	151	387	57	118	116	60	72
115	150	380	12	28	35	24	445	503	102	249	163	412	61.5	125	134	65	77
125	150	420	12	35	42	30	500	560	112	277	180	457	70	141	139	75	87
135	160	450	12	35	42	30	530	590	112	286	189	475	70	148	147	80	92
140	170	470	12	35	42	30	550	610	112	292	195	487	70	152	155	80	92

4-bolt Housings

D	H1	J	T	N	N1	G	Lb	L1	H	H2	H3	H4	K	ΔH	ΔL	J1	W
150	170	430	16	28	34	24	510	580	106	273	190	463	75	146	153	100	90
160	180	450	16	28	34	24	530	600	106	279	196	475	75	150	160	110	95
170	190	480	16	28	34	24	560	630	106	289	205	494	75	157	169	120	105
180	210	510	16	35	42	30	610	684	116	316	221	537	87	169	185	130	115
200	220	540	16	35	42	30	640	714	116	325	230	555	87	176	194	140	220
220	240	600	20	35	42	30	700	774	120	344	252	596	87	192	211	150	230
240	260	650	20	42	50	36	770	848	130	377	274	651	99	209	229	160	240
260	280	670	20	42	50	36	790	868	130	384	280	664	99	212	243	160	240
280	300	710	20	42	50	36	830	908	130	396	292	688	99	220	258	190	155
300	320	750	20	42	50	36	880	958	130	412	307	719	104	230	274	200	165

Slope α = 40°

2-Bolt Housings

D	H1	J	T	N	N1	G	Lb	L1	H	H2	H3	H4	K	ΔH	ΔL	W1	W2
40	60	170	8	15	20	12	205	261	78	165	97	262	45.5	75	71	30	38
50	70	210	10	18	24	16	255	309	87	189	115	304	49.5	89	83	35	45
65	80	230	10	18	24	16	280	334	87	199	124	323	52	95	93	40	50
75	95	260	10	22	28	20	320	374	93	219	137	356	57	104	107	45	55
90	112	320	10	26	32	24	380	434	100	248	158	406	57	119	125	55	65
100	125	350	12	26	32	24	410	464	102	259	170	429	57	127	137	60	72
115	150	380	12	28	35	24	445	503	102	273	183	456	61.5	134	158	65	77
125	150	420	12	35	42	30	500	560	112	304	203	507	70	152	165	75	87
135	160	450	12	35	42	30	530	590	112	315	213	528	70	160	175	80	92
140	170	470	12	35	42	30	550	610	112	322	220	542	70	164	183	80	92

4-bolt Housings

D	H1	J	T	N	N1	G	Lb	L1	H	H2	H3	H4	K	ΔH	ΔL	J1	W
150	170	430	16	28	34	24	510	580	106	301	213	514	75	157	181	100	90
160	180	450	16	28	34	24	530	600	106	308	220	528	75	161	190	110	95
170	190	480	16	28	34	24	560	630	106	319	231	550	75	168	200	120	105
180	210	510	16	35	42	30	610	684	116	349	249	598	87	181	219	130	115
200	220	540	16	35	42	30	640	714	116	360	259	619	87	188	229	140	220
220	240	600	20	35	42	30	700	774	120	382	284	666	87	206	250	150	230
240	260	650	20	42	50	36	770	848	130	419	309	728	99	225	271	160	240
260	280	670	20	42	50	36	790	868	130	426	316	742	99	227	286	160	240
280	300	710	20	42	50	36	830	908	130	440	329	769	99	235	304	190	155
300	320	750	20	42	50	36	880	958	130	459	346	805	104	246	323	200	165

Slope α = 45°

2-bolt Housings

D	H1	J	T	N	N1	G	Lb	L1	H	H2	H3	H4	K	ΔH	ΔL	W1	W2
40	60	170	8	15	20	12	205	261	78	178	107	285	45.5	79	83	30	38
50	70	210	10	18	24	16	255	309	87	205	127	332	49.5	94	98	35	45
65	80	230	10	18	24	16	280	334	87	215	137	352	52	100	108	40	50
75	95	260	10	22	28	20	320	374	93	238	152	390	57	110	125	45	55
90	112	320	10	26	32	24	380	434	100	270	175	445	57	126	146	55	65
100	125	350	12	26	32	24	410	464	102	282	189	471	57	135	160	60	72
115	150	380	12	28	35	24	445	503	102	298	204	502	61.5	141	183	65	77
125	150	420	12	35	42	30	500	560	112	332	225	557	70	161	192	75	87
135	160	450	12	35	42	30	530	590	112	344	237	581	70	169	203	80	92
140	170	470	12	35	42	30	550	610	112	353	245	598	70	173	213	80	92

4-bolt Housings

D	H1	J	T	N	N1	G	Lb	L1	H	H2	H3	H4	K	ΔH	ΔL	J1	W
150	170	430	16	28	34	24	510	580	106	330	237	567	75	165	210	100	90
160	180	450	16	28	34	24	530	600	106	339	244	583	75	169	220	110	95
170	190	480	16	28	34	24	560	630	106	351	256	607	75	177	231	120	105
180	210	510	16	35	42	30	610	684	116	383	277	660	87	190	253	130	115
200	220	540	16	35	42	30	640	714	116	396	288	684	87	198	265	140	220
220	240	600	20	35	42	30	700	774	120	421	315	736	87	216	289	150	230
240	260	650	20	42	50	36	770	848	130	461	343	804	99	236	314	160	240
260	280	670	20	42	50	36	790	868	130	470	351	821	99	237	331	160	240
280	300	710	20	42	50	36	830	908	130	486	366	852	99	246	351	190	155
300	320	750	20	42	50	36	880	958	130	507	385	892	104	258	373	200	165

Appendix A

Dimensions as described below are available in manufacturers' catalogues.

Dim	Description
D	Shaft diameter
H1	Height from underside plummer block to centre-line of shaft (split line)
J	Bearing centres
N	Bearing hold down bolts slot width
N1	Bearing hold down bolts slot length
G	Bearing hold down bolts diameter
Lb	Plummer block overall length

The plate thickness is given per bearing size and is a reasonable minimum. It is assumed that the plate thickness will apply throughout, including webs, flanges and gussets.

For parallel pedestals, the minimum height is given by $H = 2\left(\frac{G}{1{,}2} + T\right) + 50\,\text{mm}$.

This will allow a reasonable clearance between the plummer block bolts and the structural hold-down bolts. The value of H is maintained as the minimum height at the lower end of the sloped pedestal.

The plate length is given by $L_1 = Lb + 2\cdot(N - G) + 50\,\text{mm}$. This applies to both faces.

$H2 = H + L1\cdot\tan\left(\frac{\alpha}{2}\right) - T$ mm and α is the slope of the top plate. This will allow the portion of the end plate to be at right angles to the sloped plate and therefore give reasonable clearances for bolting.

$H3 = L1\cdot\sin\left(\frac{\alpha}{2}\right) + T\cos\left(\frac{\alpha}{2}\right)$ mm to the top edge.

Thus, the overall height to the top edge $H4 = H2 + H3$ mm

As the top plate is sloped, the centre of the shaft (centre of the bearing bore) will deviate both upwards and backwards.

$$\beta = \tan^{-1}\left(\frac{2\cdot(H1+T)}{L1}\right) \qquad R = \sqrt{(H1+T)^2 + \left(\frac{L1}{2}\right)^2}$$ (reference dimension)

Thus $\Delta H = (R\cdot\tan(\beta+\alpha)) - H1$ and $\Delta L = \left(\frac{Lb}{2}\right) - (R\cdot\cos(\beta+\alpha))$

REVISIONS AND AMENDMENTS

Revision 00	September 2018	Original document
Amendment 1	December 2025	CMA formatting applied